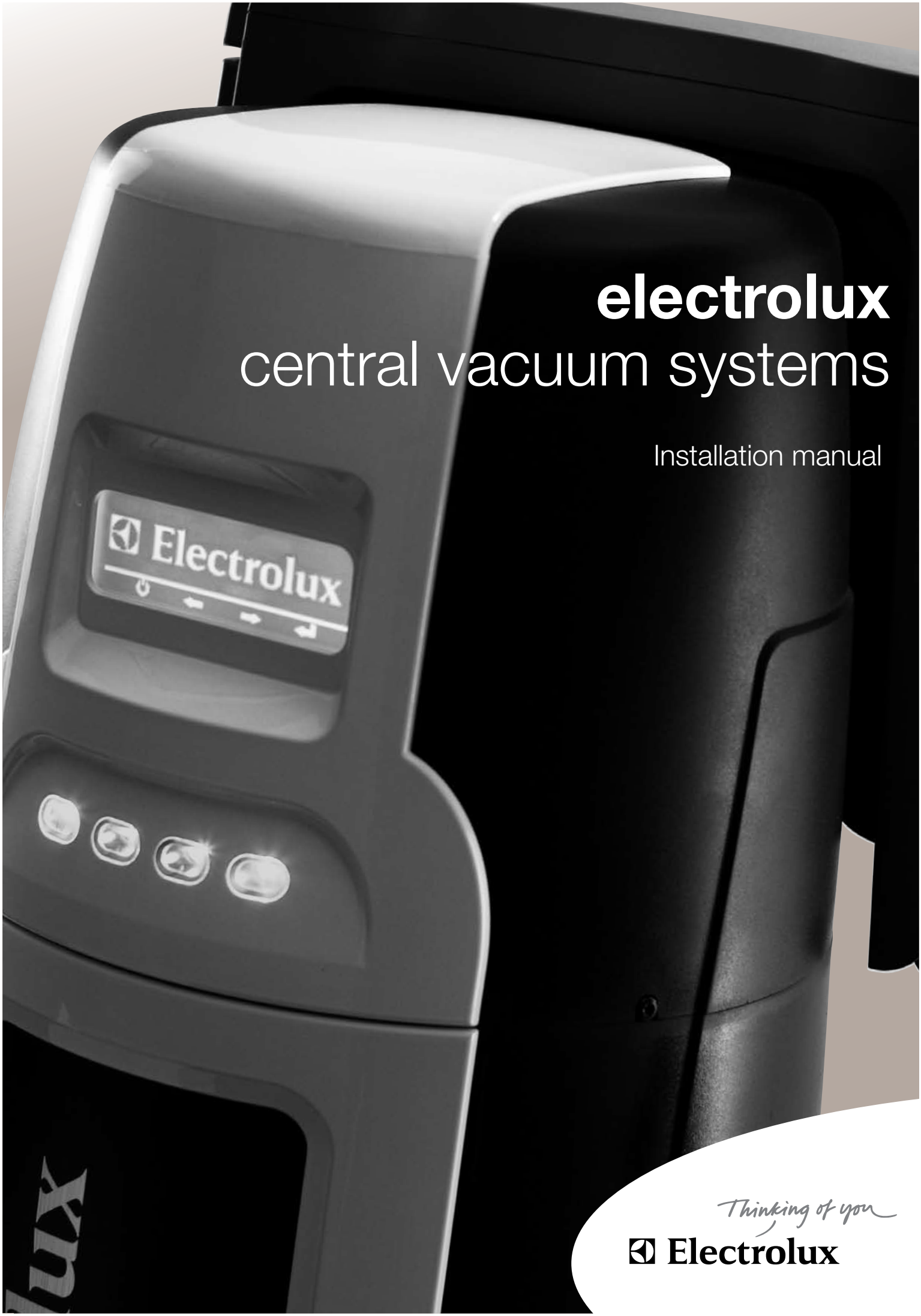

electrolux
central vacuum systems

Installation manual

Thinking of you

Electrolux

Contents

Central Vacuum System Installation

Location of the Power Unit 3
Tubing System Design 3
Location of Wall Inlet Valves.....3
Typical Installation Examples 3
Installation of Wall Inlets 4
Tubing System Installation 7
VacPan Installation 8
Exhaust Blow-Out 9
Electrical Connections.....10

Read these instructions carefully. Installation of the central vacuum system is easy and can be performed with regular hand tools. The system can be installed both in new and existing buildings. When using a central vacuum system, it is important to make sure there is a sufficient compensation air supply. Normal ventilation ensures that there is enough compensation air. This central vacuum system is very useful, and you can enjoy it for years to come.

Location of the Power Unit

Place the power unit preferably in a heated area like the utility room, garage, storage room, or laundry room. If the power unit is installed in a cold storage room, the vacuum tubing and the exhaust pipe should be insulated in order to avoid condensation.
In buildings with two or more stories, it is recommended to always place the power unit on the lowest floor. If the equipment is placed on the upper floor, the power unit must be more powerful so that even the heaviest dust particles can be vacuumed and transferred into the dust container. When selecting the installation location, it is recommended that you ensure that the placement does not disturb your neighbors or interfere with your own comfort and activities. Make sure that there is a wall outlet nearby for connection to the electrical network. If you are not sure about the placement, contact your local building inspector or fire authority for more information.

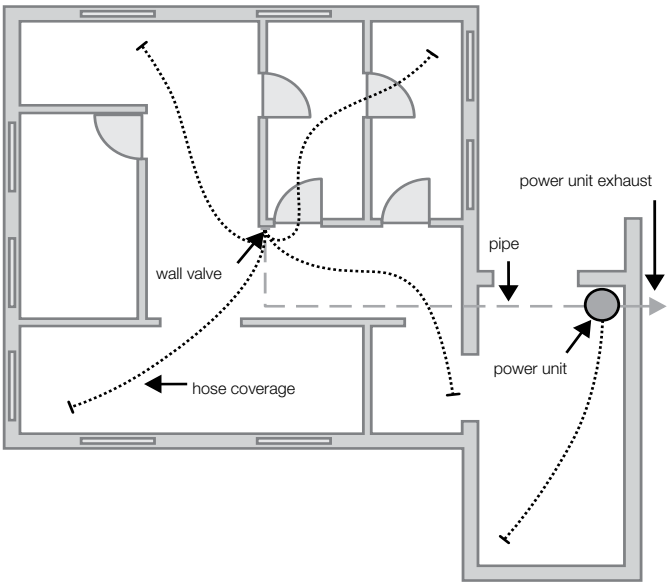

Tubing System Design

The main principle for designing the layout of the tubing system is to keep it as short as possible. This will give the highest possible vacuum performance. However, the main tube can be routed in different ways.

The outside diameter of the tubing system is 2” (50.08mm) and is 2 1/8” (56mm) at the extension. The through-holes in the walls must be 2 3/16” to 2 1/2” (55mm to 60mm) in diameter so that the extension and the low-voltage cable can also go through the opening. The minimum diameter of the exhaust tube is 2 1/8” (56mm).

New One-Story Houses
The horizontal main tube is placed in the under-house crawl space or in the attic. In the under-house crawl space, the tubing should be insulated. Tubes to the inlet valves are routed in the partition walls or between secondary spaces, such as closets. In a cold attic, the tubes should be covered with insulation in order to avoid condensation.

Two- or Multi-Story Houses
The main tube is placed in the under-house crawl space, attic, closet, between walls, etc.

Existing Houses
The main tube can be installed on the surface in existing secondary spaces, such as a garage or storage room. The tube can also be routed through the attic and then vertically inside the partition walls and closets all the way to the inlet valves. A lowered ceiling and closet footings can also be used for routing of the tubes.

Location of Wall Inlet Valves

Wall inlet valves can be placed in the wall or in the floor. Place the inlets preferably so that you can reach every corner of the room with a vacuum hose that is 27 to 33 feet long (8m to 10m). There is a utility valve in the power unit, which allows you to conveniently clean the space where the vacuum is located and close-by areas, thus eliminating the need to install another inlet valve and tubing route.

Marking the Placement of the Inlet Valves
Mark the installation points of the inlet valves in the layout drawings using wire of the same length as the actual vacuum hose. When using drawings scaled 1:1000 the wire length is 3 1/4” (8 cm), and when using drawings scaled 1:50 the wire length is 6 1/2” (16 cm). Suitable places for inlet valves are entrance halls, hallways, etc.

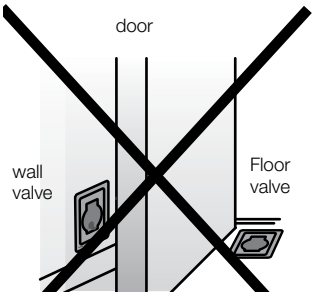

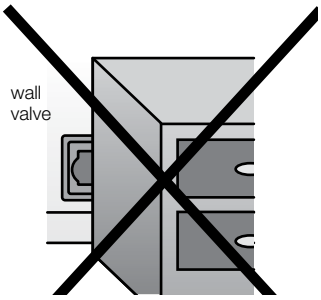

Typical Installation Examples

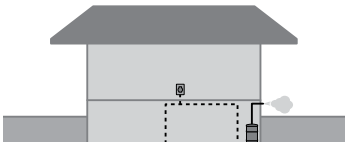

In a typical house only two inlet valves are needed. In such cases, the utility valve of the power unit can be used for cleaning the basement because it often covers the whole basement area.

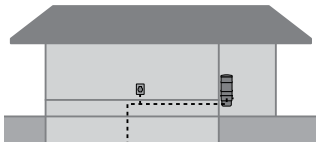

In the house of the same size, the power unit is in the garage, where the utility valve serves as a third inlet valve allowing you to clean your car, for example.

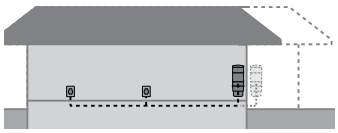

In this example, the main tube has been routed under the house. However, the tube in the under-house crawl space should be insulated to avoid condensation.

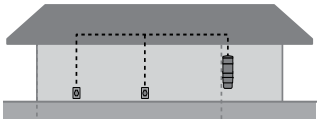

In this example, the simplest solution is to route the tubing in the attic. If the space is cold, the main tube should be insulated.

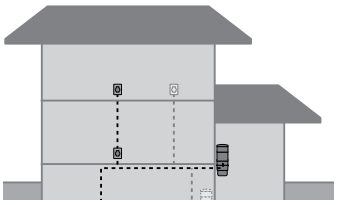

The whole floor area can often be vacuumed from one single inlet valve. The light, broken line indicates an alternative installation type.

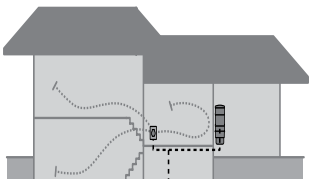

It is recommended to place the inlet valves in between different levels. In such cases, you can easily clean two levels from one inlet valve. The power unit is placed in the storage room.

Installation of the Wall Inlet Valves

For the installation, you will usually need the following parts:

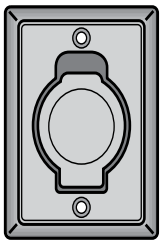

Inlet valve

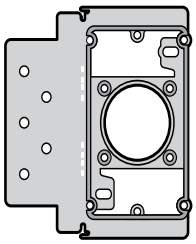

Mounting bracket

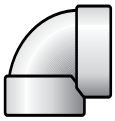

90° elbow

Wall Installation of the Inlet Valve

A typical wall inlet valve installation is shown in the figure on the right. A 90° inlet elbow is used in the wall installation to prevent long objects entering into the tubing system, protecting it against blockages. A 90° steep elbow can be fitted in two different ways. In practice, the partition wall can be as narrow as 2 3/4" (65mm).

Note! A 90° inlet elbow must not be installed anywhere else in the tubing system.

If the thickness of the wall board is more than 1" (25mm), you can reach the mounting bracket by using an extension tube.

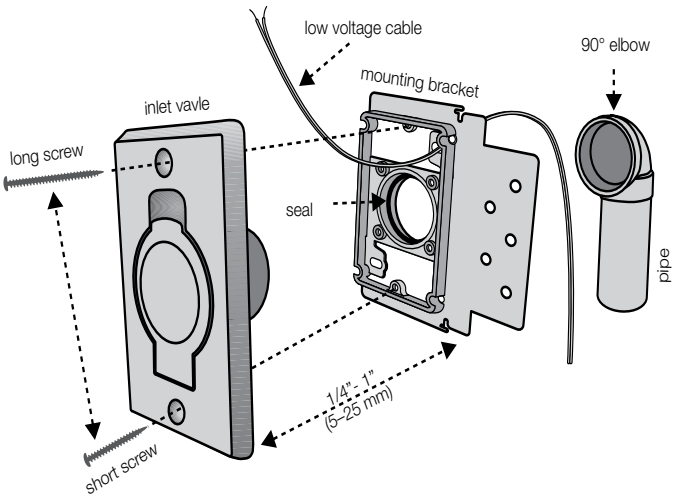

Note! When installing the short version of the 90° inlet elbow, use short screws so that they do not extend into the tube.

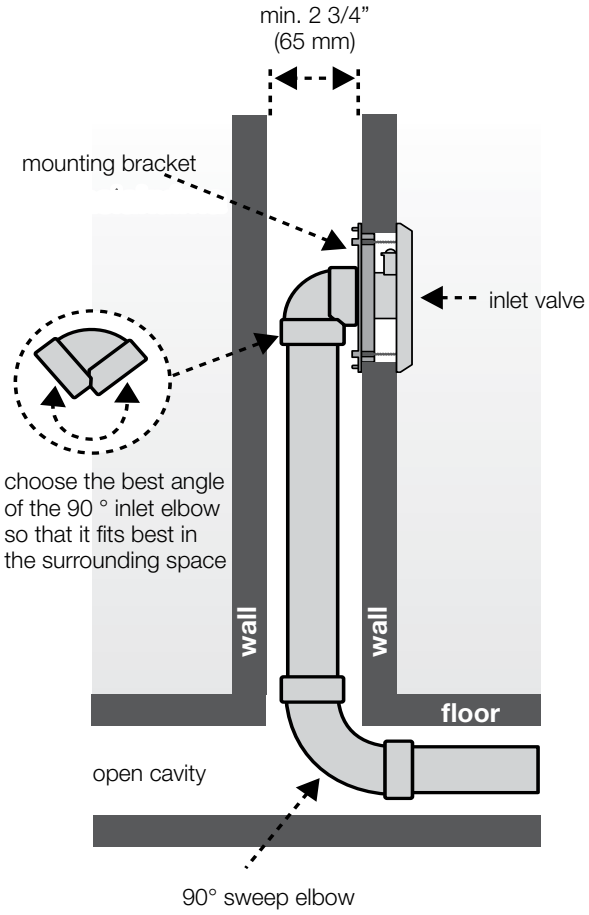

If the Structures of the House Prevent Tubing Routing
This can be avoided by making slots as shown in the figure below. Supporting structural elements of the house should not be slotted. If you cannot attach the mounting bracket properly to the batten wall, you can install a separate mounting board.

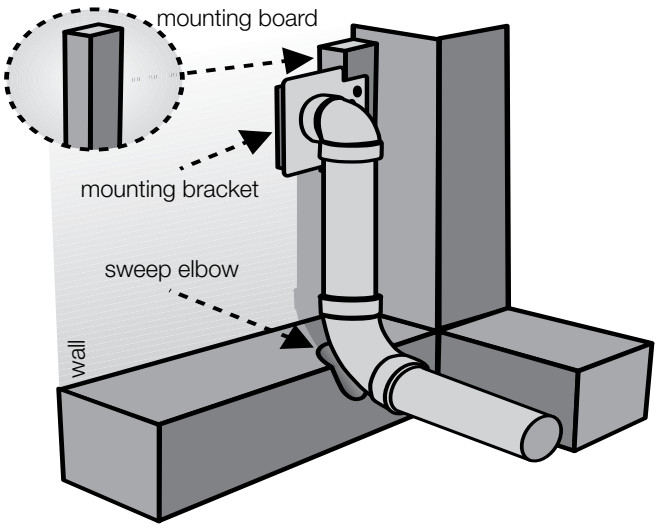

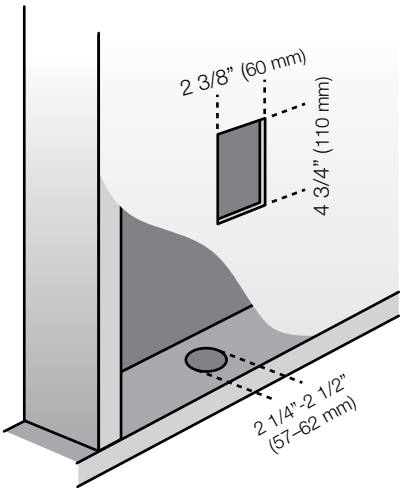

Inlet Hole
Make a hole in the board material for the inlet valve as shown in the figure. The size of the rectangular opening should be 2 3/8" x 4 3/4" (60mm x 110mm). In existing houses where tubes are routed underneath, a hole can be drilled for the tube using a guide hole as a template. Glue the 90° inlet elbow onto the sleeve of the mounting bracket. Leave a gap of approximately 5/8" (15cm) for the low-voltage cable to be connected to the inlet valve. Then the dust tube is glued into the inlet elbow.

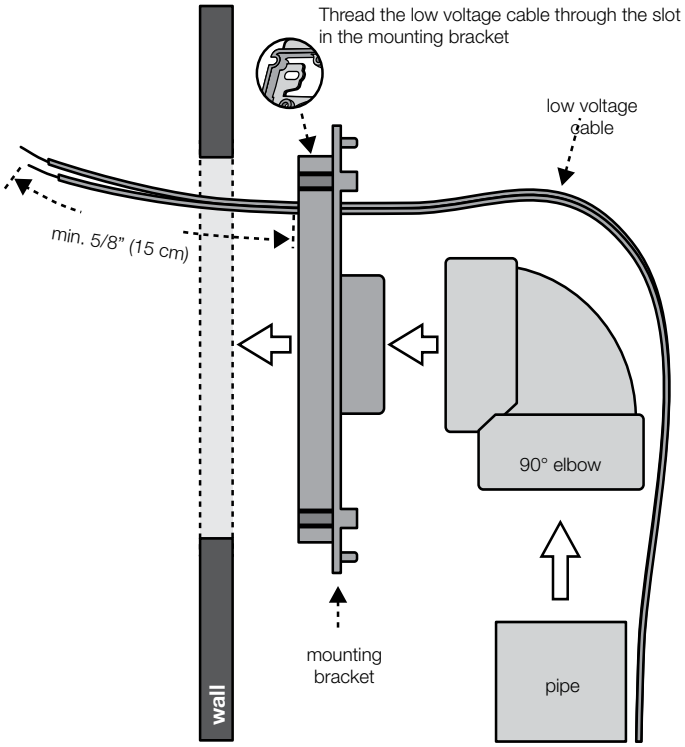

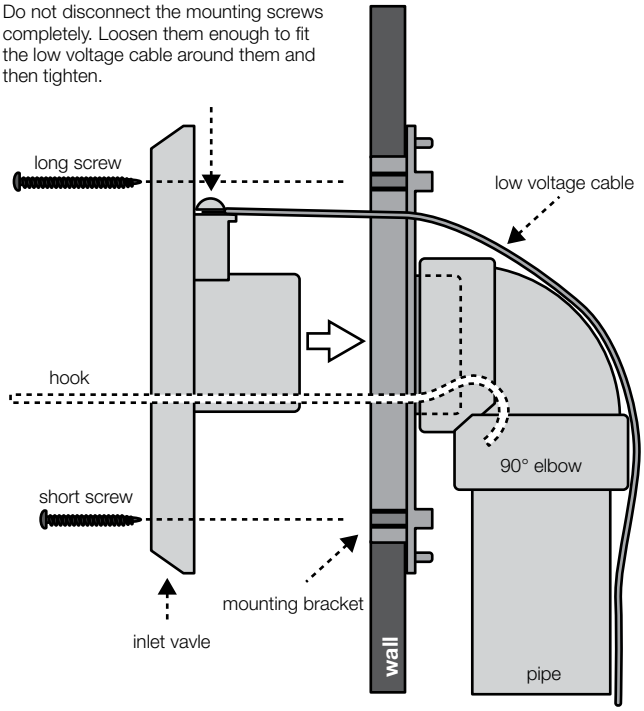

Strip off approximately 1" (2cm to 3cm) of the insulation from the end of the low-voltage cable. Roll the end of the cable two turns around the screws in the inlet valve and tighten the screws.

Screw the inlet valve into the mounting bracket and make sure that the screw does not extend through the tube. If necessary, use shorter screws. In a complete wall structure, the mounting bracket is held in place by a hook as shown in the figure.

Installation in a Brick or Concrete Wall

When installing the inlet valve, sink the pipes, the inlet elbow, and the mounting bracket in the wall so that the highest surface of the mounting bracket is approximately 1/4" (5mm) deeper than the final inner surface. For the tubing system, make a 3 1/8" x 3 1/8" (80mm x 80mm) channel in the brick or concrete wall independent of the final thickness of the wall. The tubing installation must be sturdy enough so that tubes and parts do not move out of their positions later during the installation work. It is recommended to cover the opening of the inlet valve to protect it from cast material.

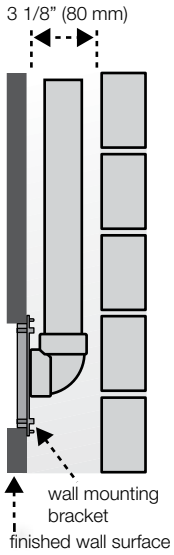

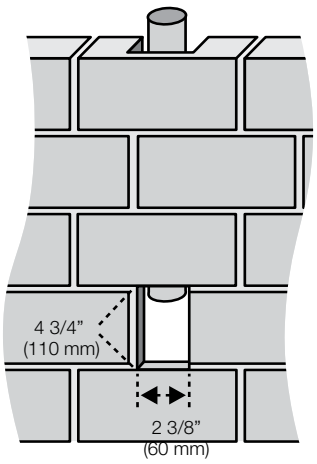

The tube can also be installed block / brick wall with the rear side. In this case, the wall is made imurasiaa for a picture with the hole.

Floor Installation of the Inlet Valve

This is usually the only possible installation method in existing houses.

Note! When installing the inlet valve and tubing system in the floor, make sure that long sticks etc. do not to fall into the tubing.

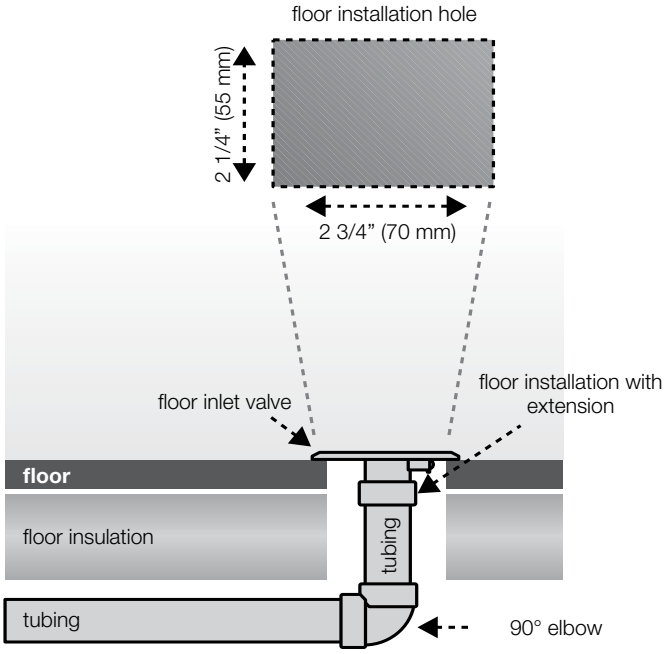

For a floor installation, it is recommended to use the method shown in the figure, if applicable. It is the same as for the wall installation. The 90° inlet elbow prevents long objects from accessing the tubing system. For this method to be successful, the allowance under the floor should be at least 2 2/3" (65mm).

For floor installation, it is possible to use the floor sleeve or rebuilding sleeve. In such cases, the mounting bracket is not needed.

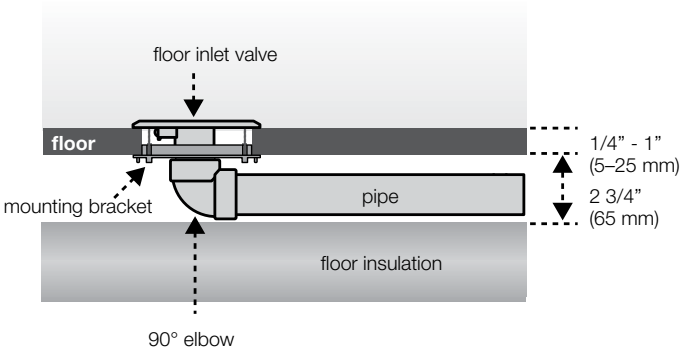

Installation in a Closet Wall

Choose a location and make a 2 1/8" x 2 3/4" (55mm x 70mm) opening for the inlet valve. For the tube, a 2 3/8" (60mm) diameter hole is needed. Drill a hole for the tube also in the floor of the closet. Cut the tube to the proper length and glue it into the rebuilding sleeve.

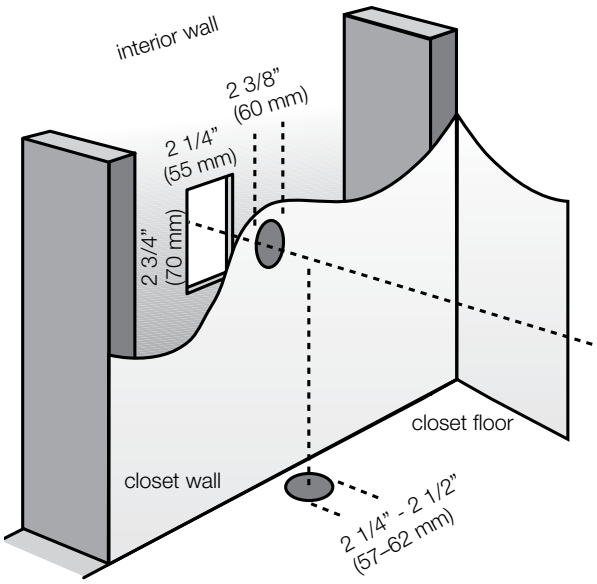

Insert the tube into the round hole with the floor sleeve/rebuilding sleeve first so that it extends through the outer wall of the closet. Mount the inlet valve in the rebuilding sleeve. Measure and cut the tube to the proper length so that it reaches with the inlet elbow to the vertical tube.

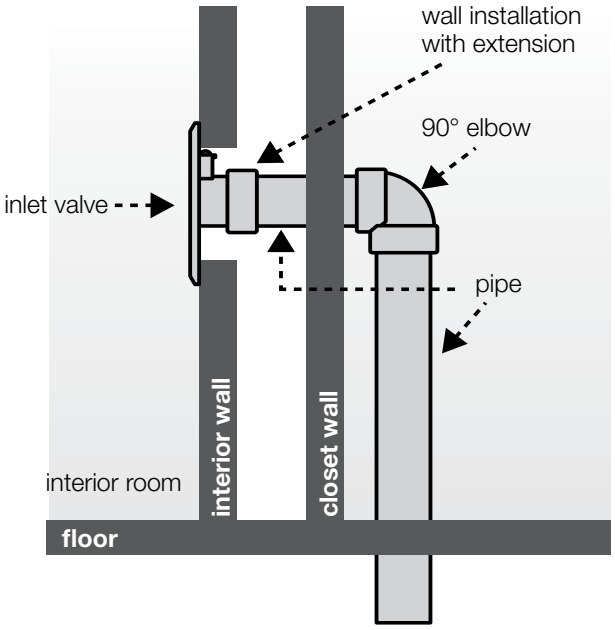

Tubing System Installation

Important notes for installation!

1) The 90° inlet elbow may be installed only together with the mounting bracket and the inlet valve. Anywhere else in the tubing system, 90° sweep elbows and 45° elbows should be used. (Fig. A and B)

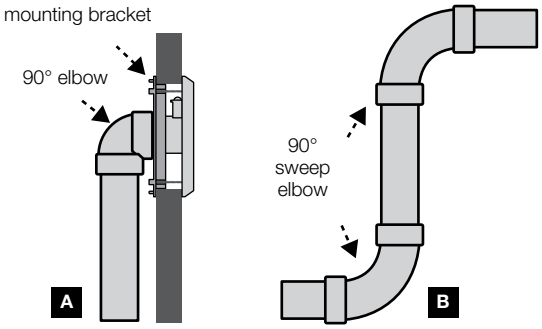

2) Tubes are cut straight so that the cutting line is not slanted. Use a miter saw if possible. Cut edges can be finished with a knife (to remove burrs).

3) For tubing joints, use suitable PVC glue to make the fittings secure and tight. Apply a thin and even layer of glue only to the end of the tube – not to the sleeve. This will prevent the glue from overflowing to the end face of the tubing. Close the glue can carefully immediately after use and make sure to have adequate ventilation during installation. Avoid inhaling glue vapors. Insert the tube all the way into the sleeve while turning it at the same time (Fig. C).

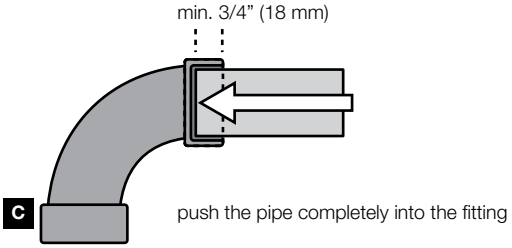

4) The inlet is made through the fire wall according to Fig.figure E or by using a 2" (50mm) diameter fire cuff (Fig. D). Check the inlet with a fire authority.

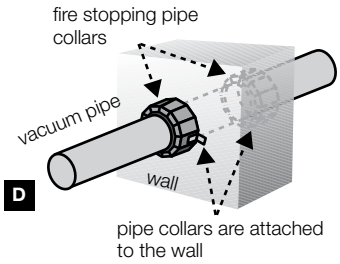

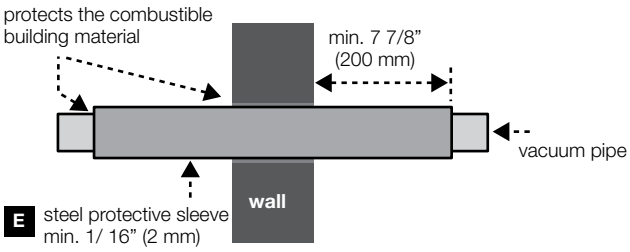

Begin the main tube installation with the farthest inlet valve and place the tubes temporarily at first. Do not glue the joints yet until you have made sure that the tubing routing is correct. The glue will dry quickly; therefore, the joints have to be fitted right after applying the glue.

When measuring the tubes, take into account that the tube goes approximately 2/3" (18mm) into the sleeve and approximately 7/8" (20mm) into the extension tube.

The tubing system can also be installed in a floor that will be concrete casted later on (Fig. F). In such cases, the low-voltage cable must be protected by a conduit pipe. The conduit pipe should be attached to the vacuum tube or the casting net. For the vacuum tube, the routing channel has to be 2" wide (51mm). The ends of the vacuum tubes and the conduit pipes should be plugged before concrete casting.

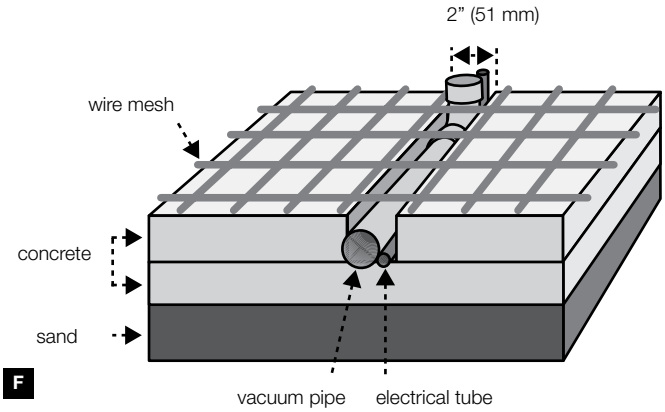

Installation Examples

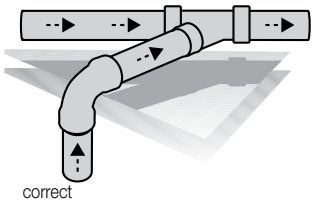

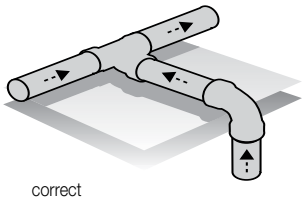

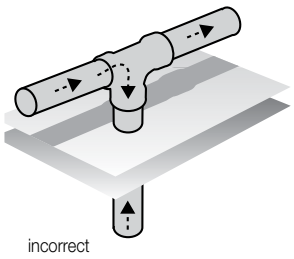

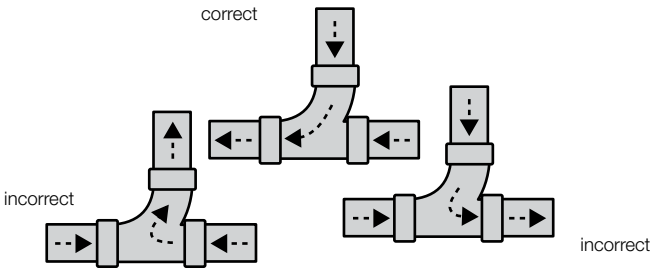

Notes!

Minimize Condensation
If the tubing installation is carried out in winter, a large amount of condensation may be generated. To reduce the amount of condensation, close all pipe holes and inlet openings using duct tape during installation. Before starting to use the central vacuum system for the first time, let the system vacuum and circulate fresh air for a few minutes, and make sure that there is no water in the dust container. If there is water in the container, drain it and continue vacuuming until no more water is accumulated.

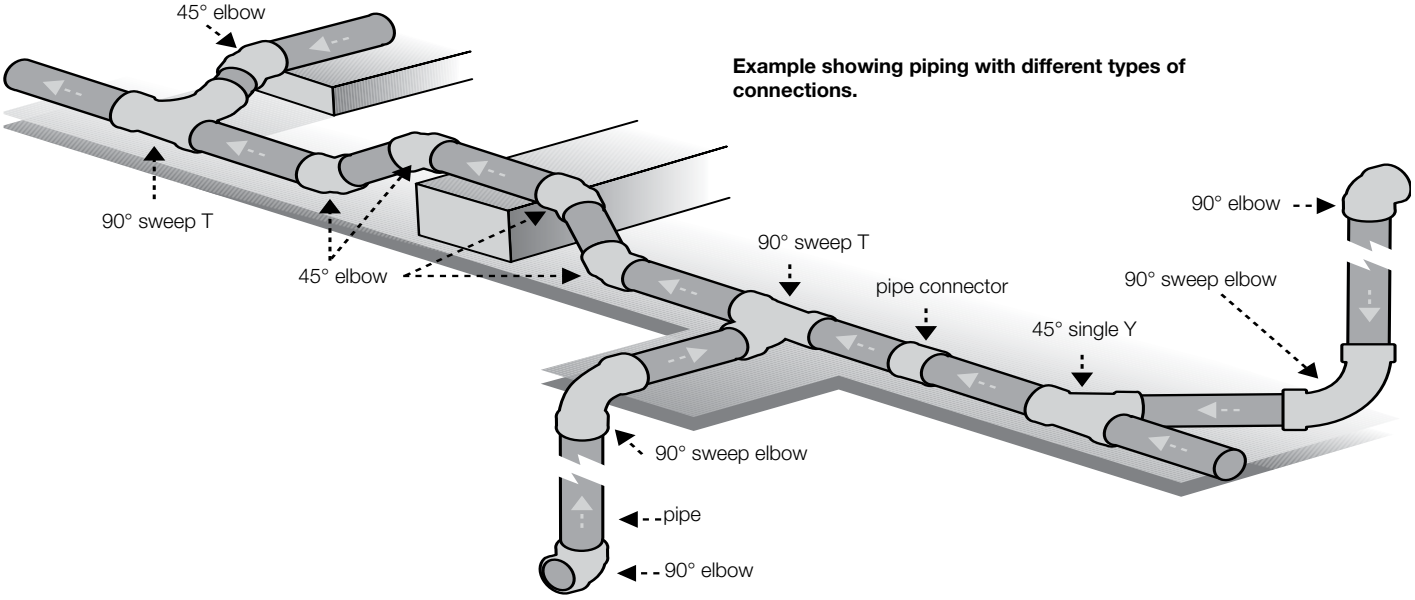

Example showing piping with different types of connections.

VacPan Installation

VacPan is most useful in the kitchen, in the hallway, etc. It can be easily installed, for example, in a cabinet footing or next to the wall.

VacPan dimensions:

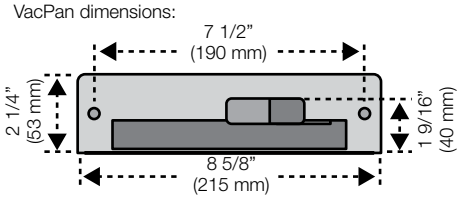

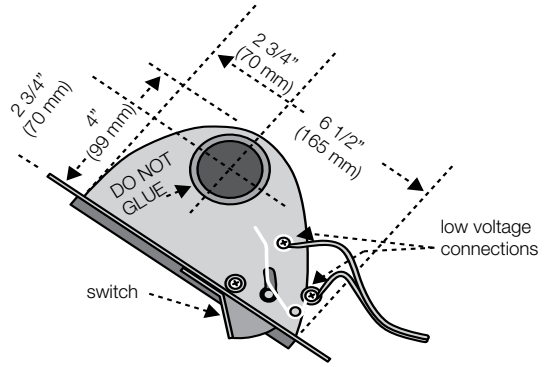

Example of a VacPan installed in a cabinet.

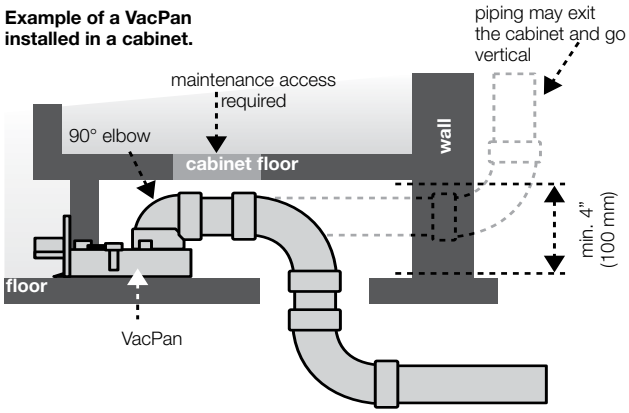

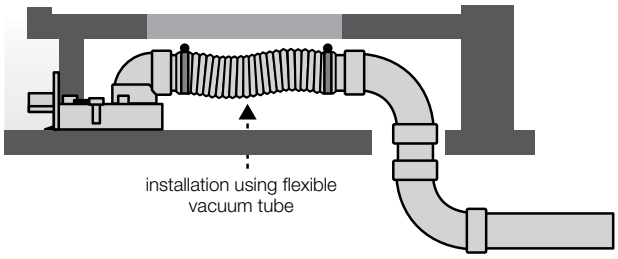

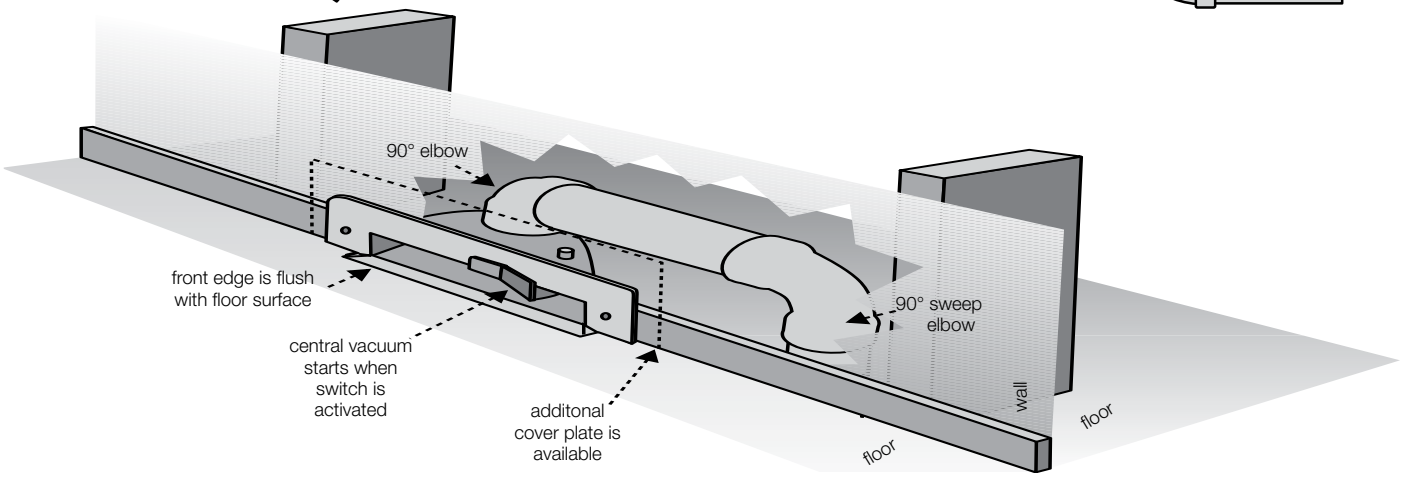

Exhaust Blow-Out

Because the exhaust tube must be as short as possible, it is recommended to place the power unit as close to an outside wall as possible. Shown below are examples indicating how to install the exhaust tube. The exhaust muffler can be installed upwards, downwards, as well as horizontally.

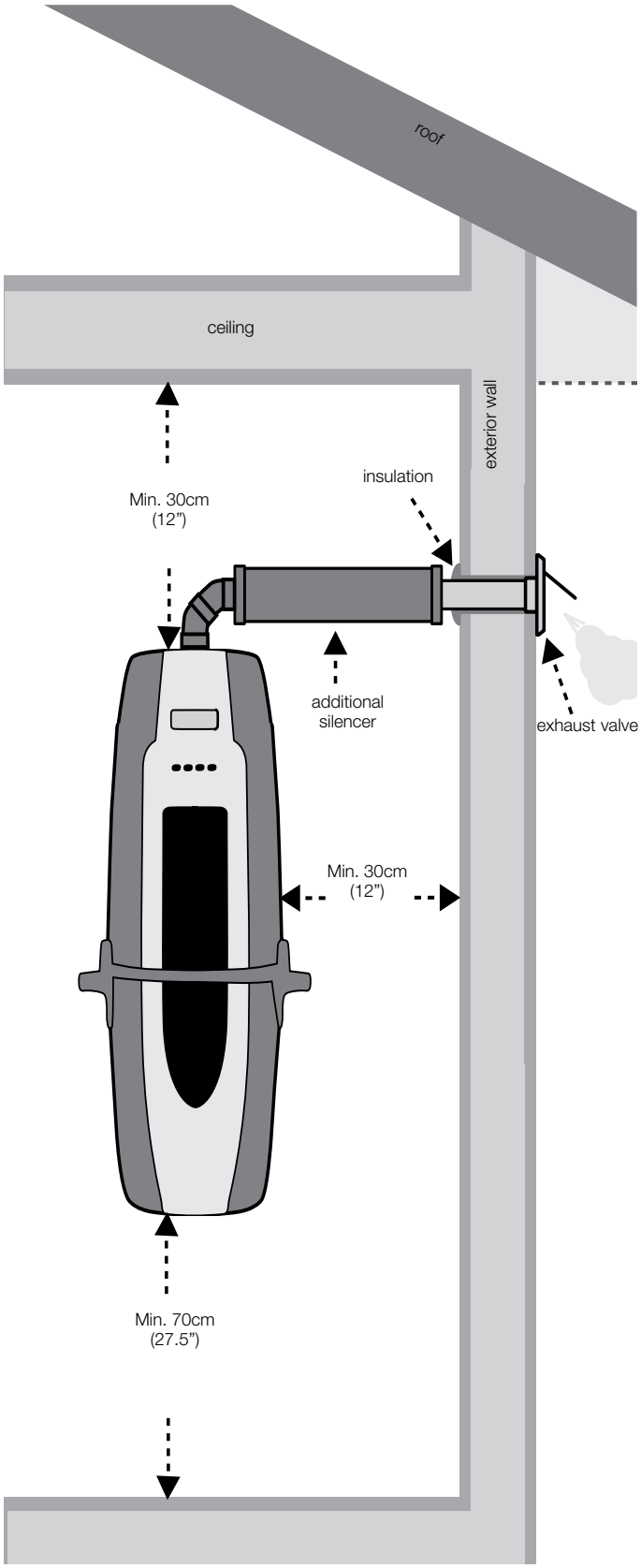

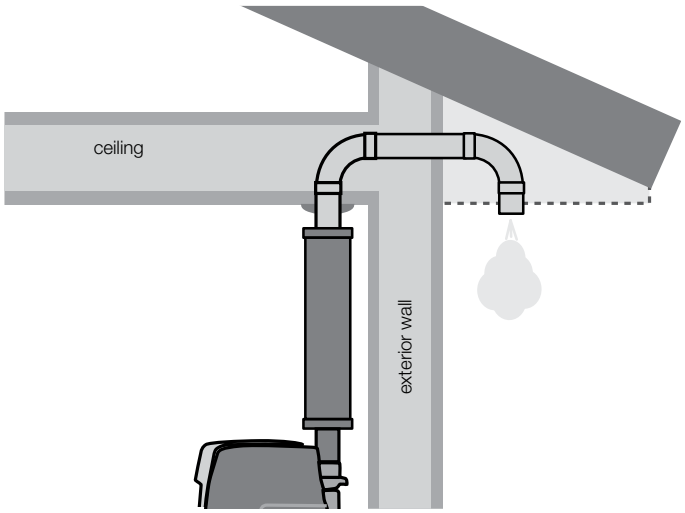

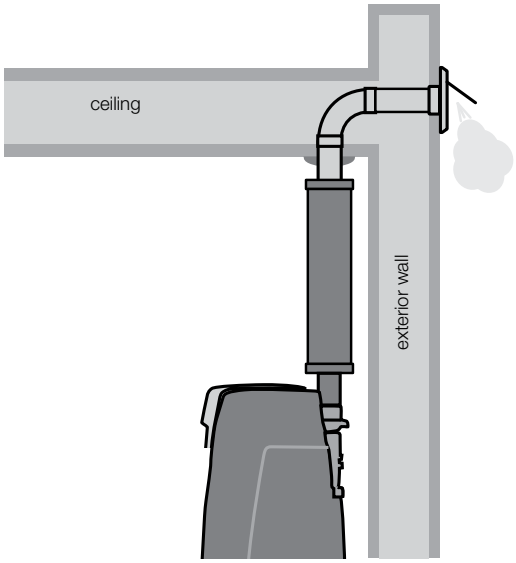

Electrical Connection-Low-Voltage Cable

To power on the central vacuum system, a 24V low-voltage cable is routed to each inlet valve. Parallel connection is made according to the figure below.

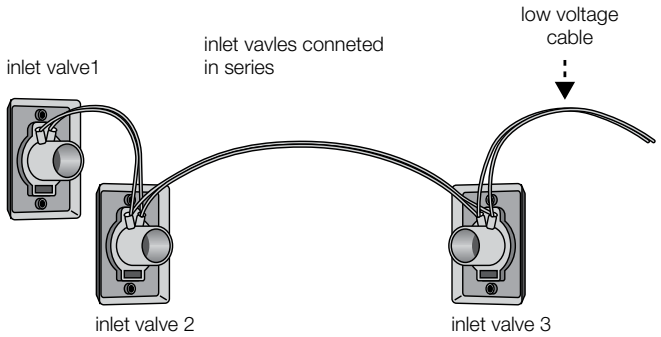

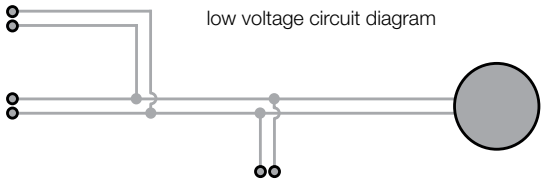

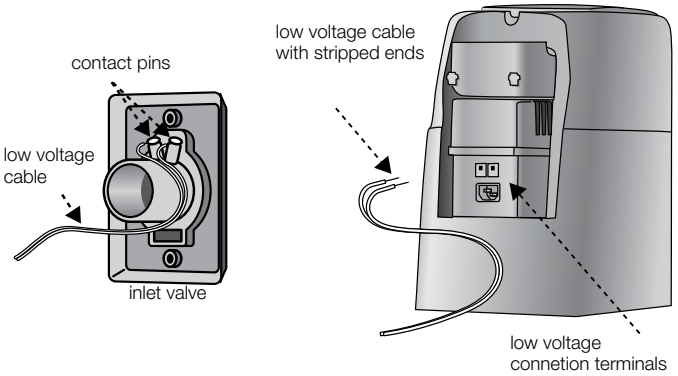

It is recommended that the low-voltage cable be installed in a conduit pipe, and this is absolutely necessary when cables are to be hidden in cast concrete. If the cable becomes defective, it is also much easier to change it afterwards. In these installations, only certified electrical components may be used.

The power unit is connected to an electrical outlet. If there is no outlet nearby, an electrician will carry out installation.
All the high-voltage connections are under the turbine cover. Only an electrician is allowed to open the cover.

Electrolux Central Vacuum Systems
1700 West Second Street
Webster City, IA 50595
United States of America

www.electroluxcentralvac.com

The Thoughtful Design Innovator.

Do you remember the last time you opened a gift that made you say, “Oh! How did you know? That’s exactly what I wanted!” That’s the kind of feeling that we at Electrolux seek to evoke in everyone who chooses or uses one of our products. We devote time, knowledge, and a great deal of thought to anticipating and creating the kind of appliances that our customers really need and want.

This kind of thoughtful care means innovating with insight. Not design for design’s sake, but design for the user’s sake. For us, thoughtful design means making appliances easier to use and tasks more enjoyable to perform, freeing our customers to experience the ultimate 21st century luxury: ease of mind. Our aim is to make this ease of mind more available to more people in more parts of their everyday lives, all over the world.

The “Thinking of you” promise from Electrolux goes beyond meeting the needs of today’s consumers. It also means we’re committed to making appliances safe for the environment—now and for future generations.

Electrolux. Thinking of you.

Share more of our thinking at www.electrolux.com